

Product brief

1EDN7550 and 1EDN8550 EiceDRIVER™

1-channel low-side gate driver family with truly differential inputs prevents false triggering of power MOSFETs

Overview:

› The input signal levels of conventional low-side gate driver ICs are referenced to the ground potential of the gate driver IC. If in the application the ground potential of the gate driver IC shifts excessively false triggering of the gate driver IC can occur.

› The 1EDN7550/1EDN8550 gate driver ICs have truly differential inputs. Their control signal inputs are largely independent from the ground potential. Only the voltage difference between its input contacts is relevant.
This prevents false triggering of power MOSFETs.

Applications

› Server
› Telecom
› DC-DC converters
› Telecom bricks
› Power tools
› Industrial SMPS
› Wireless charging
› Solar micro inverter

Product features	Product benefits	Application benefits
› Truly differential inputs	› Control inputs independent from gate driver GND	› Robust against ground shifts from power MOSFET switching
› 4 A source current › 8 A sink current › Separate source/sink outputs › Low-ohmic output stage	› Fast Miller plateau transition › Fast shut-off › No diode voltage drop → Near zero gate voltage at turn-off › Low power dissipation within gate driver IC	› Low MOSFET switching losses › Robust against false MOSFET triggering › Highest effective MOSFET driving power
› 29 ns input minimum pulse width › 7 ns propagation delay accuracy	› Up to 15 MHz switching speed › Precise	› Efficiency gains
› 5 A reverse current robustness of the outputs › 4 V and 8 V UVLO versions	› No schottky clamping diodes required › Fast and reliable MOSFET turn-off	› Increased power density and BOM savings › Instant MOSFET protection under abnormal operation
› SOT-23 package, 6 pins	› Small	› High power density

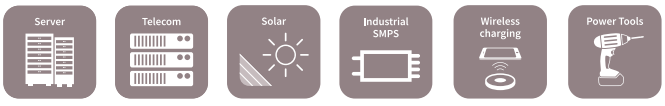

www.infineon.com/1EDN-TDI

1EDN7550 and 1EDN8550 EiceDRIVER™

1EDN7550 driving CoolMOS™ SJ MOSFET on 1-layer PCB

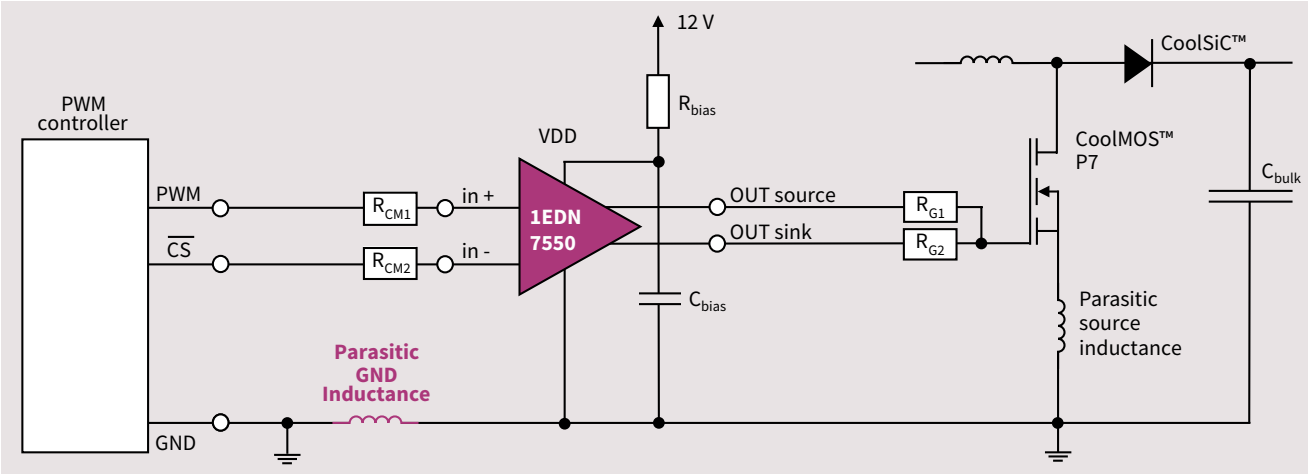

1EDN8550 driving Kelvin source CoolMOS™ SJ MOSFET in boost PFC

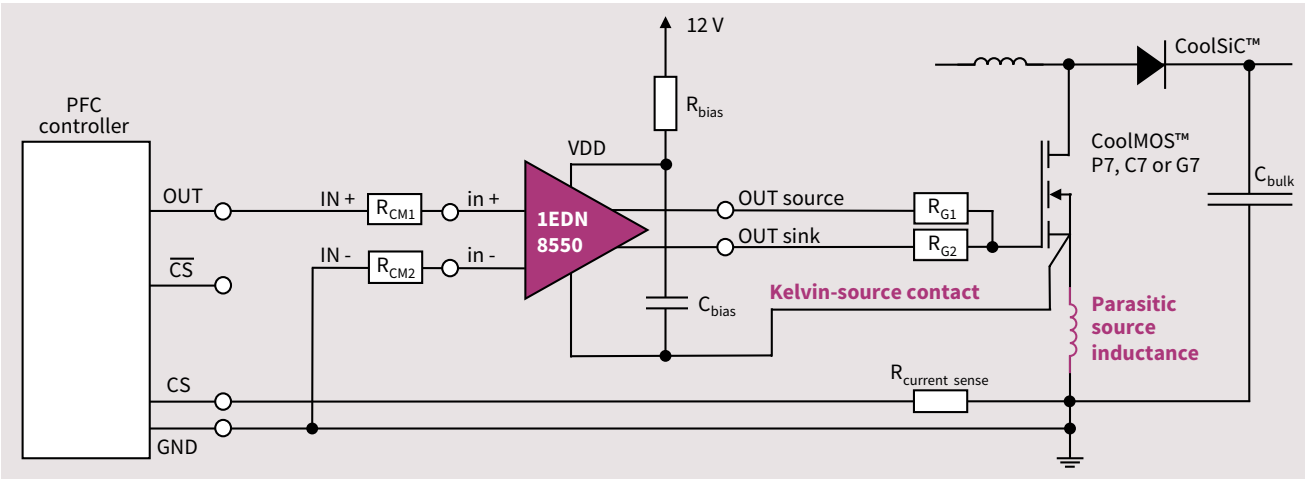

Product portfolio

Type	Ground shift robustness		UVLO	Package
	dynamic	static		
1EDN7550B	+/- 150 V	+/- 70 V	4 V	6pin SOT-23
1EDN8550B	+/- 150 V	+/- 70 V	8 V	6pin SOT-23

Pinout

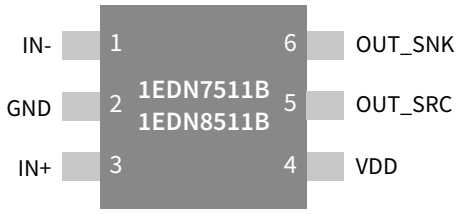

Published by
Infineon Technologies Austria AG
9500 Villach, Austria

© 2018 Infineon Technologies AG.
All Rights Reserved.

Order Number: B152-I0561-V1-7600-EU-EC
Date: 01 / 2018

Please note!
THIS DOCUMENT IS FOR INFORMATION PURPOSES ONLY AND ANY INFORMATION GIVEN HEREIN SHALL IN NO EVENT BE REGARDED AS A WARRANTY, GUARANTEE OR DESCRIPTION OF ANY FUNCTIONALITY, CONDITIONS AND/OR QUALITY OF OUR PRODUCTS OR ANY SUITABILITY FOR A PARTICULAR PURPOSE. WITH REGARD TO THE TECHNICAL SPECIFICATIONS OF OUR PRODUCTS, WE KINDLY ASK YOU TO REFER TO THE RELEVANT PRODUCT DATA SHEETS PROVIDED BY US. OUR CUSTOMERS AND THEIR TECHNICAL DEPARTMENTS ARE REQUIRED TO EVALUATE THE SUITABILITY OF OUR PRODUCTS FOR THE INTENDED APPLICATION.

WE RESERVE THE RIGHT TO CHANGE THIS DOCUMENT AND/OR THE INFORMATION GIVEN HEREIN AT ANY TIME.

Additional information
For further information on technologies, our products, the application of our products, delivery terms and conditions and/or prices, please contact your nearest Infineon Technologies office (www.infineon.com).

Warnings
Due to technical requirements, our products may contain dangerous substances. For information on the types in question, please contact your nearest Infineon Technologies office.

Except as otherwise explicitly approved by us in a written document signed by authorized representatives of Infineon Technologies, our products may not be used in any life-endangering applications, including but not limited to medical, nuclear, military, life-critical or any other applications where a failure of the product or any consequences of the use thereof can result in personal injury.